EPCET LIBRARY BANGALORE-49

CBCS SCHEME

USN | | | | | | | | | | |

BME701

Seventh Semester B.E./B.Tech. Degree Examination, June/July 2026
Finite Element Method

Time: 3 hrs. Max. Marks: 100

Note: 1. Answer any FIVE full questions, choosing ONE full question from each module.
2. M : Marks , L: Bloom's level , C: Course outcomes.

		Module – 1	M	L	C
Q.1	a.	Explain the steps involved in FEM.	8	L1	CO1
	b.	Explain plane stress and plane strain condition.	8	L1	CO1
	c.	Write the strain displacement equations for a 3D electric body.	4	L2	CO1
		OR			
Q.2	a.	Explain principle of minimum potential energy.	5	L2	CO1
	b.	Use Rayleigh-Ritz Method to find stress and displacement at the mid point of a bar shown in Fig.Q.2(b). Take E = 70 GPa, A = 100 mm^2. Assume the displacement model to be a 2nd order polynomial. 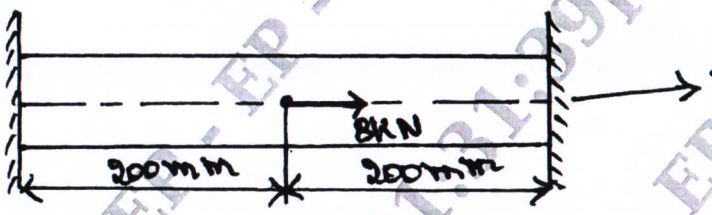 Fig.Q.2(b)	15	L3	CO1
		Module – 2			
Q.3	a.	Derive shape function for triangular (CST) element in natural coordinate system.	8	L2	CO2
	b.	For the axially loaded bar shown in Fig.Q.3(b). Determine : i) Nodal Displacements ii) Element stress. Take E_{steel} = 200 GPa, E_{cu} = 100 GPa. 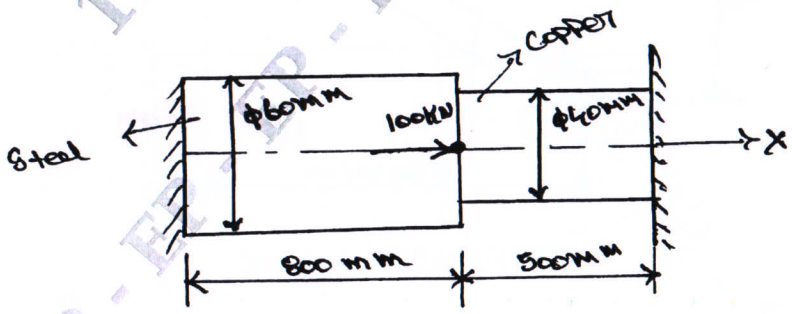 Fig.Q.3(b)	12	L3	CO2

VTU-15-06-2026 01:11:13pm - EP - EP - EP

OR

Q.4	**a.**	Derive stiffness matrix for a 1D bar element using the principle of minimum potential energy.	**8**	**L3**	**CO2**
	b.	For the bar shown in Fig.Q.4(b), an axial load $P = 60 \times 10^3$ N is applied at its midpoint using penalty method of handling boundary conditions determine the nodal displacements and support reactions.	**12**	**L2**	**CO2**

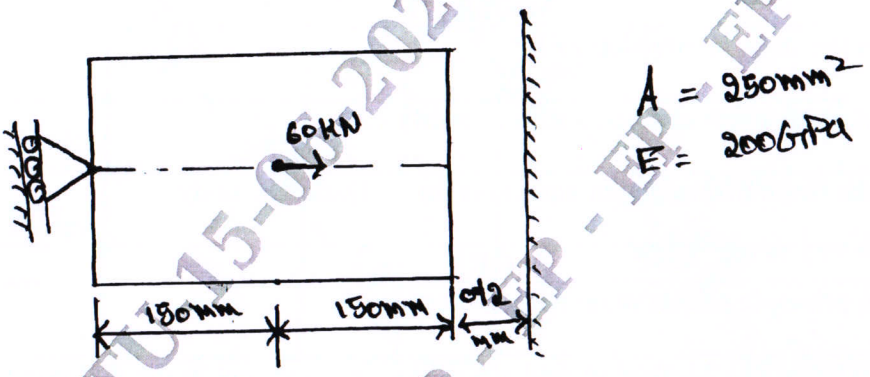

Fig.Q.4(b)

Module – 3

Q.5	**a.**	Define Plane Truss and list the assumptions made in analysis of truss element.	**5**	**L1**	**CO3**
	b.	For the two bar truss shown in Fig.Q.5(b), find the nodal displacements, stress and support reactions. Take E = 200 GPa.	**15**	**L3**	**CO3**

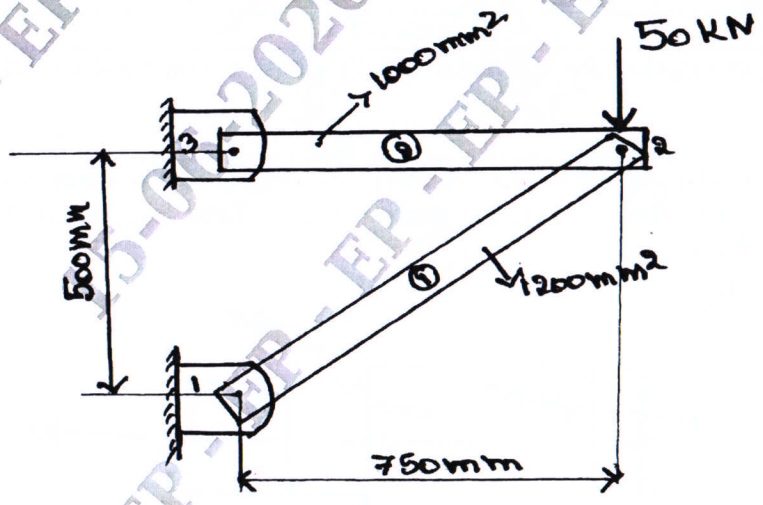

Fig.Q.5(b)

OR

Q.6	**a.**	Derive the Hermite shape functions for a beam element.	**10**	**L3**	**CO3**
	b.	For the beam shown in Fig.Q.6(b) determine the slopes at 2 and 3. Also determine the vertical deflection at the mid points of the distributed load. Take E = 200 GPa, I = 4×10^6 mm^4.	**10**	**L2**	**CO3**

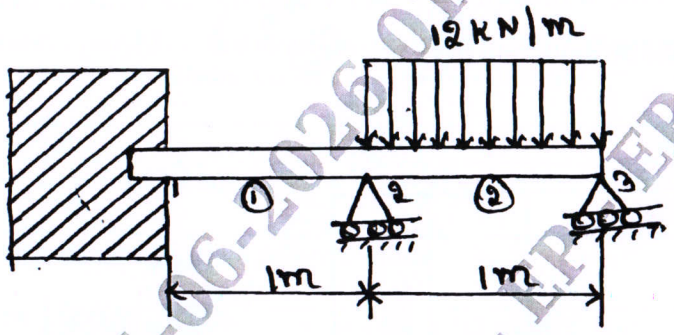

Fig.Q.6(b)

Module – 4

Q.7	**a.**	Write a short note on the following: i) Simplex, complex and multiplex elements ii) 2D Pascal Triangle	**10**	**L1**	**CO4**
	b.	Derive shape function for 2nd order bar element in natural coordinates.	**10**	**L2**	**CO4**

OR

Q.8	**a.**	Briefly explain ISO Parametric, Sub parametric and Super parametric elements.	**10**	**L2**	**CO4**
	b.	Derive shapes function for a 2D quadrilateral element using natural coordinate system.	**10**	**L3**	**CO4**

Module – 5

Q.9		For the stepped bar shown in Fig.Q.9, determine the Eigen values and Eigen vectors. Take A_1 = 400 mm^2, A_2 = 200 mm^2, ρ = 7850 kg/m^3, E = 200 GPa.	**20**	**L2**	**CO5**

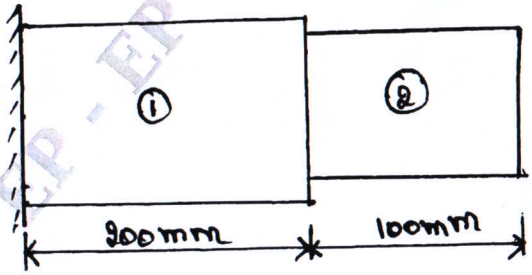

Fig.Q.9

VTU-15-06-2026 01:11:13pm - EP - EP - EP

OR

Q.10		A composite wall consist of three materials as shown in Fig.Q.10. The outer temperature is $T_0 = 20°C$, convective heat transfer takes place on the inner surface of the wall with $T_\infty = 800°C$ and $h = 25\ W/m^2C$. Determine the temperature distribution in the wall.	**20**	**L3**	**CO3**

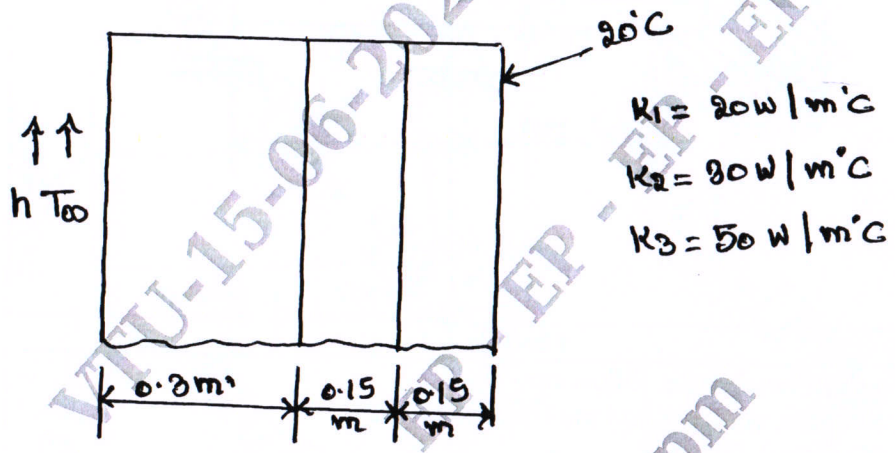

Fig.Q.10

*****

VTU-15-06-2026 01:11:13pm EP - EP - EP -